Fig. 14-A (Rev. 08/14) (Concluded)
(New 02/97)

PLATE, HORIZONTAL, SINGLE LOAD, WITH OR WITHOUT OVERHANG—FLATCARS

Item	No. of Pcs.	Description
A		Load should be centrally located on car at origin, but must not be closer than 2 ft from the B end and 1 ft. from the A end of car. Conventional flatcars only. When the load is prepared on flatcars with side-mounted hand brakes, the load may be located no closer than 1 ft from either end of the car or from any hand brakes and safety appliances that extend above the side sill.
B	As required.	Bearing pieces: hardwood, minimum 2 in. × 6 in., in one piece and preferably rough. If dimension of Item B is increased, width must be at least 2 in. greater than height. Height of end bearing pieces sufficient to maintain a minimum of 4 in. clearance above idler car. The length must be about equal to width of car. Locate end pieces approximately 3 ft from end of load with additional bearing pieces placed at approximately 10 ft intervals. If needed to increase height of end bearing piece to obtain required clearance, hardwood spacer blocks may be located underneath and perpendicular to bearing piece as shown in Sketch No. 1. Spacer blocks to be a minimum of 6 in. × 12 in. with height to suit. Place under the outside edges of load and space additional pieces every 12 in. between. Secure each to car floor with four common nails with a length at least 2 in. greater than thickness of spacer block, or two 3/4-in. bolts with washers and nuts. Secure bearing piece to each outside spacer block using three common nails with a length at least 2 in. greater than thickness of bearing piece, or one 3/4-in. bolt passing through each end spacer block and securing to car floor.
C	As required.	Separators: lumber, minimum 1 in. × 2 in., height not to exceed width, in one piece. Length about equal to but not exceeding the width of the load. Locate in line with Items B when possible. (Use optional and not shown on drawings.) When used, apply one 2 in. × .044 in. high tension band near each separator on the overhanging portion of the load to prevent displacement of the separator.
D	As required.	Sliding piece: hardwood, minimum of 6 in. wide, length equal to width of idler car. Height must be sufficient to maintain a minimum of 4 in. clearance above idler car. Locate minimum of one sliding piece on idler car with additional pieces to maintain required clearance. (Not required when material is rigid enough to maintain clearance specified.) Secure to car floor or through stake pockets with two 3/4-in.-diameter countersunk head bolts with nuts. When Item E is applied, only one set of bolts need be applied to secure both items. When sliding piece is located between end of car and body bolster, the weight on same must not exceed 15% of car's load limit. If needed to increase height of sliding piece to obtain required clearance, hardwood spacer blocks may be located underneath and perpendicular to the sliding piece. Spacer blocks to be a minimum of 6 in. × 12 in. with height to suit. Place under the outside ends of sliding piece and space additional pieces every 12 in. between. Secure each to car floor with four common nails with a length at least 2 in. greater than height of spacer block, or two 3/4-in. bolts with washers and nuts. End of lading must extend a minimum of 40 in. over Item "D."
E	1 per each Item D.	Steel plate: 1/4 in. × 6 in., length equal to length of Item D. Secure to top of Item D by bolting through Item D and stake pockets with two 3/4-in.-diameter countersunk head bolts with nuts. Use optional when bottom load width on overhanging portion is 30 in. or greater.
F	5 pair for cars 60 ft long and under. 6 pair for flatcars over 60 ft long.	Clamping pieces: steel, 1/2 in. × 3 1/2 in., length to suit. Locate square to load and position end pieces approximately 6 to 10 ft from ends of load on carrying car. Locate intermediate pieces at equal intervals between. May be secured to stake pocket using hook method or bolted to stake pocket as shown in Sketch No. 3. Refer to Sketch No. 2 for details.
G	1 per each pair of Items F.	Tie rods: steel rod or bolt, 3/4-in.-diameter, length to suit. Pass through Items F on top of load and secure with washer and nut on each end. Use of "all thread" rod is permissible as per Section 1, General Rule 16.

Notes and Additional Requirements:

1. Height of load including separators must not exceed 42 in. above top of bearing pieces.
2. All bolts used during securement are to have the threads chisel checked or otherwise sufficiently distorted to prevent bolts and/or nuts from working loose.
3. Do not weld, cut/burn holes, or modify car body without car owner's permission.

Reference the General Rules in Section No. 1 of the *Open Top Loading Rules Manual* for additional details.

Fig. 14-B
(New 11/15)

PLATE, HORIZONTAL, STEEL—FLATCARS OR BULKHEAD FLATCARS

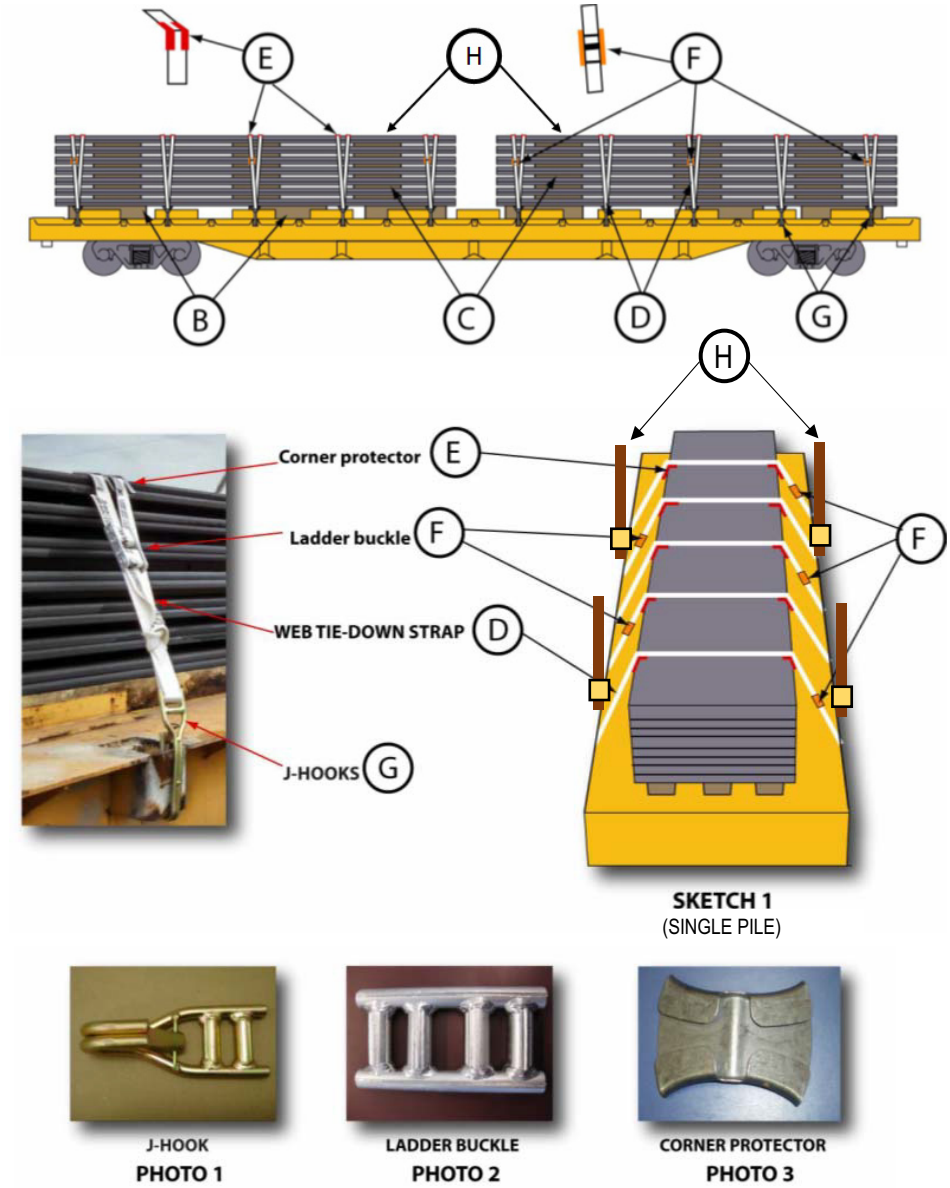

Item	No. of Pcs.	Description
A		Load shall be centrally located on car at origin, but must not be closer than 2 ft from either end of the car or from any hand brakes and safety appliances that extend above the side sill (conventional flatcars only).
B	Minimum of 2.	Bearing Pieces: hardwood, minimum 2 in. × 3 in. × 8 ft, height not to exceed width. Locate pieces longitudinally no more than 3 ft apart and no more than 12 in. from ends and sides of piles with others equally spaced between but not less than 3 ft apart. When bearing pieces are placed crosswise, their surface area must be equivalent to the lengthwise pieces, and their length must be equivalent to the width of the load (see note 2).
C	As required.	Separators: lumber, 2 in. × 3 in., height not to exceed width. Locate pieces longitudinally no more than 3 ft apart and no more than 12 in. from ends and sides of piles with others equally spaced between but not less than 3 ft apart. When separators are placed crosswise, their surface area must be equivalent to the lengthwise pieces, and their length must be equivalent to the width of the load.

IMPLEMENTED 11/2015

Fig. 14-B (Concluded)
(New 11/15)

PLATE, HORIZONTAL, STEEL—FLATCARS OR BULKHEAD FLATCARS

Item	No. of Pcs.	Description
D	5 per pile 20 ft long. Add 1 for each additional 4 ft or less.	Tie-down straps: AAR-approved Type 1A polyester Grade 8 strapping (double tie-down method) secured to stake pockets with J-hooks (Item G) or to lading strap anchors and joined with ladder buckles (Item F). Place end straps no less than 12 in. and no more than 36 in. from the end of each pile with others equally spaced between. For plate 90 in. wide or less, add one additional strap.
E	As required. Minimum 4 per strap.	Corner protectors: must be designed for non-metallic strapping and have sides folded over to prevent strap from sliding (see drawing Item E and Photo 3 for example).
F	1 per tie-down strap.	Ladder buckles: (Photo 2) AAR-approved buckle as per General Rules Table 19.3. Buckles must be placed alternately side to side (i.e., first strap buckle placed on right side of load, second strap buckle placed on left side of load, etc.; see SKETCH 1).
G	2 per tie-down strap.	J-Hook: (Photo 1) AAR approved Hook as per table 19.3 or equivalent, may be used if equipped on car.
H	2 pair per pile.	Side-stakes: (Sketches 1 and 2) hardwood, 4 in. × 4 in., length to extend above top of load, placed between first and second straps at end of each pile. Secure to stake pockets to prevent displacement.

Notes and Additional Requirements:

1. .Load shall be centered on car at origin.
2. On cars equipped with permanent steel bearing pieces, wood bearing pieces must be higher than the steel.
3. Side-stakes must not interfere with straps.
4. When using an equivalent J-hook, webbing must be protected against sharp edges.
5. Anchor points on the car must be inspected to ensure their integrity.
6. Height of load including separators must not exceed 42 in. above top of bearing pieces.
7. Corner protection must be used when strapping is in contact with any edge of plate.
8. Corner protectors designed for steel banding are not acceptable.

Reference the General Rules in Section No. 1 of the *Open Top Loading Rules Manual* for additional details.

IMPLEMENTED 11/2015

Fig. 14-C (Rev. 06/13)
(New 09/92)

PLATE, HORIZONTAL, EXCEEDING WIDTH OF CAR, 35 FT LONG AND OVER, OF UNIFORM LENGTH, WIDTH, AND THICKNESS—BULKHEAD FLATCARS, 50 FT TO 52 FT 6 IN. LONG

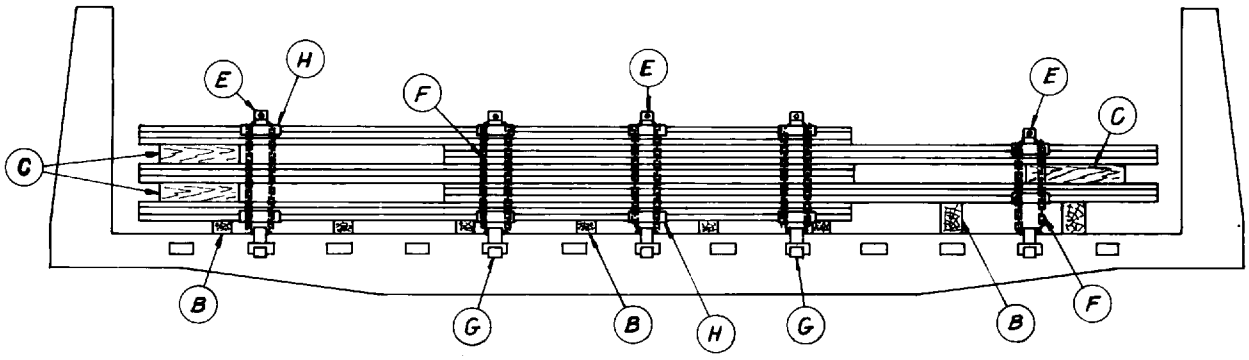

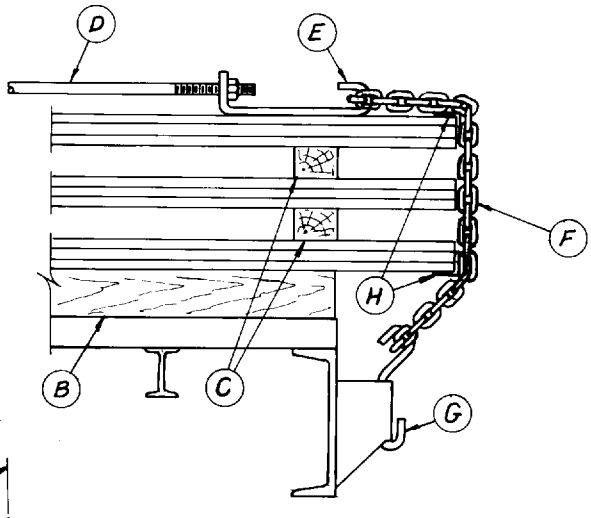

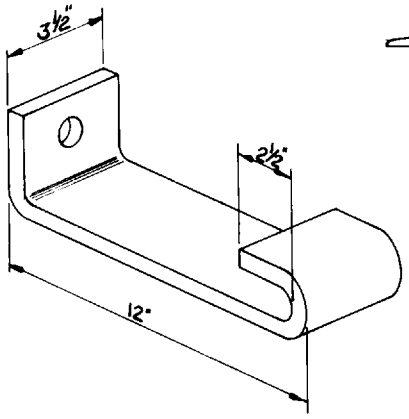

DETAIL A

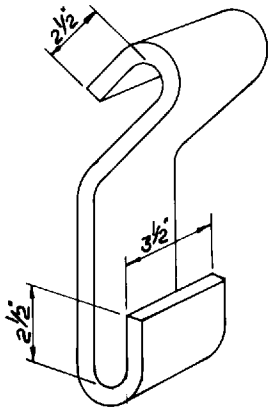

DETAIL B

Item	No. of Pcs.	Description
A		Vacant.
B	8	Bearing pieces: hardwood, 4 in. × 4 in., length equal to width of car, in one piece. Locate end pieces approximately 4 ft in from ends of pile, with others equally spaced between. Height of bearing pieces located under overhanging portion of second lift must be increased to keep load level.
C	2 rows per each void.	Separators: hardwood, 2 in. × 3 in. Locate longitudinally over side sills between overhanging lifts. Maximum void between separators and bulkhead, separators, and end of lift, must not exceed 3 ft.
D	5	Rods: 3/4-in.-diameter, threaded, with nuts. Locate across top of load and secure through hole in Items E. Use of “all thread" rod is permissible as per Section 1, General Rule 16.